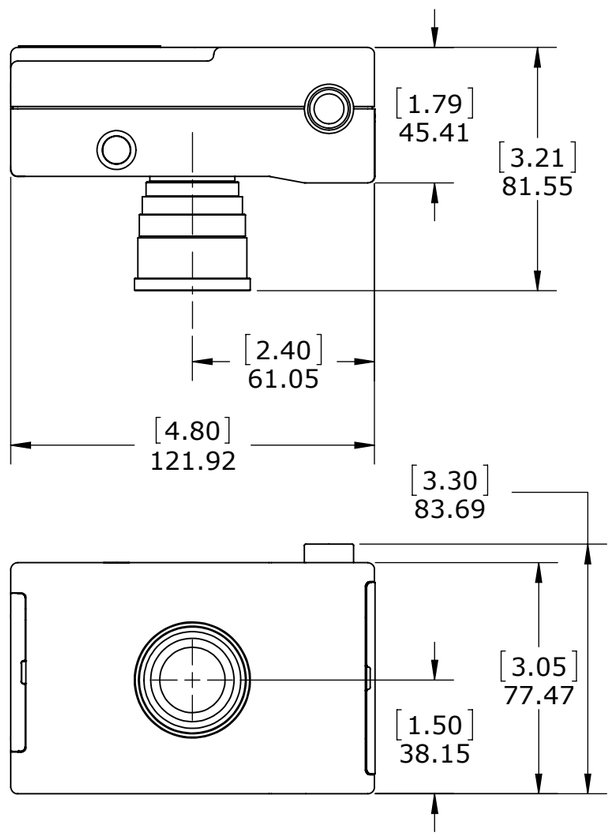
[1.79]
45.41
[3.21]
81.55
[2.40]
61.05
[4.80]
121.92
[3.30]
83.69
[3.05]
77.47
[1.50]
38.15

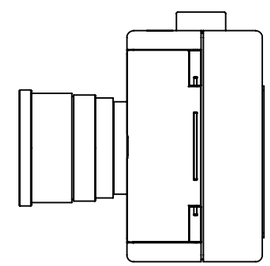

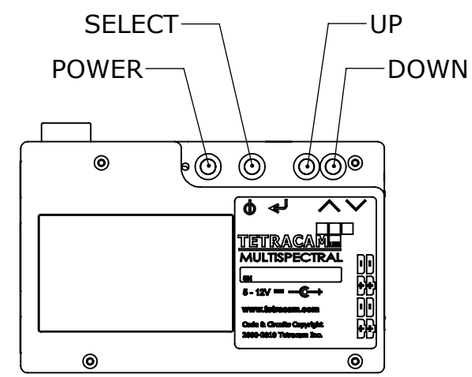
SELECT
UP
POWER
DOWN
TETRACAM
MULTISPECTRAL

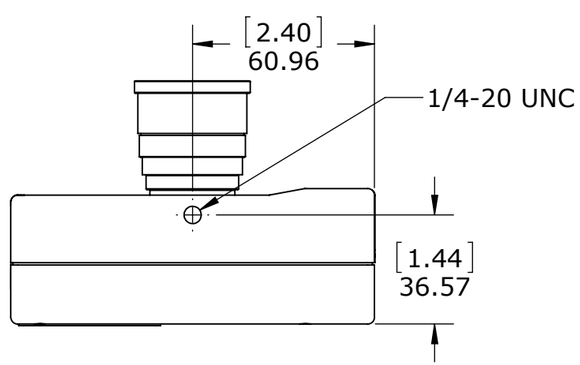
[2.40]
60.96
1/4-20 UNC
[1.44]
36.57